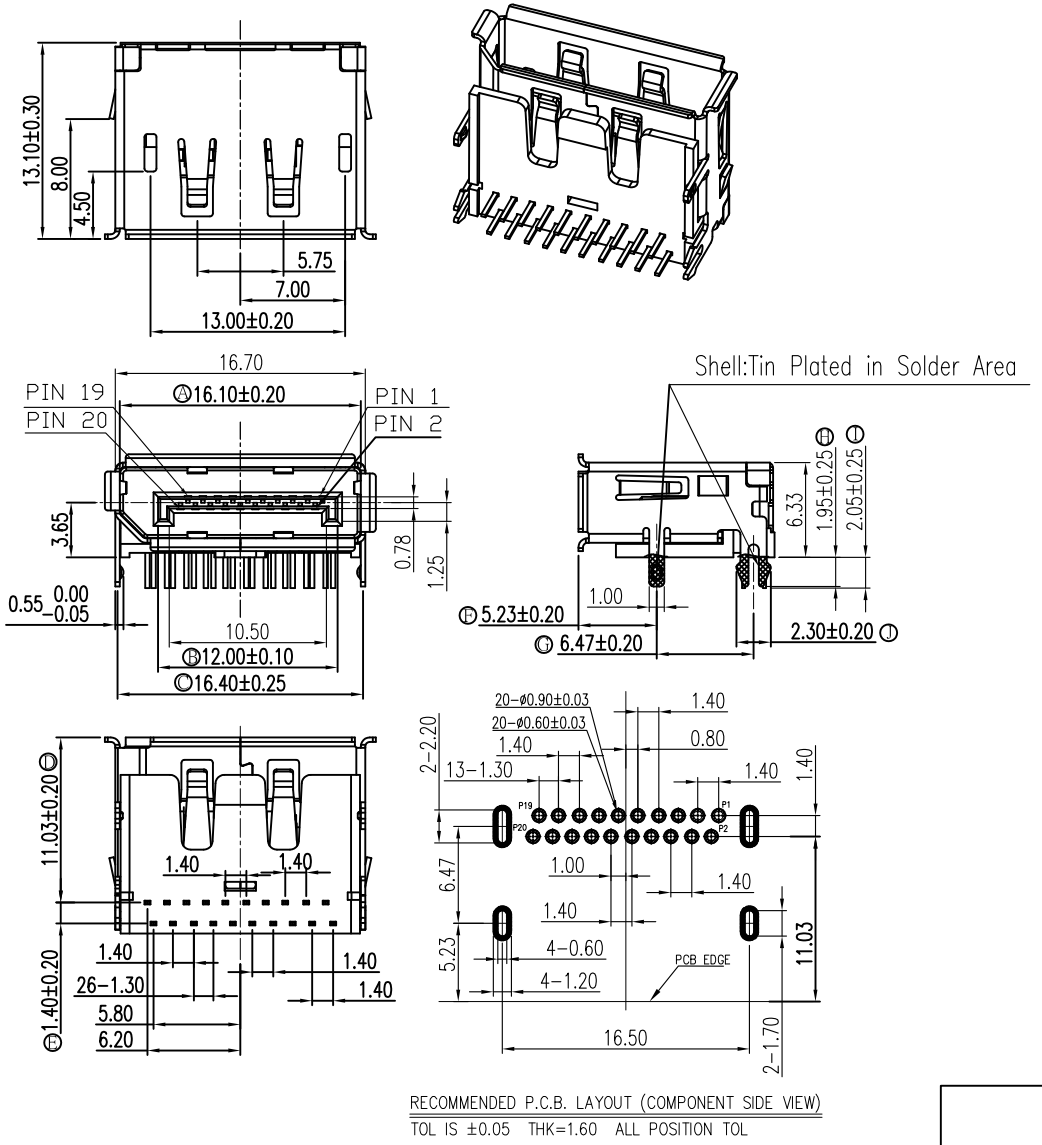

RECOMMENDED P.C.B. LAYOUT (COMPONENT SIDE VIEW)

TOL IS ±0.05 THK=1.60 ALL POSITION TOL

SPECIFICATIONS

1. DP
1.1 Voltage: 40 VAC(RMS) Max.
1.2 Current Rating: 0.5 Ampere per Contact
1.3 Contact Resistance: 30 Milliohms Max.
1.4 Insulation Resistance: 100 Megohms Min.
1.5 Dielectric Withstanding Voltage: 500 VAC(RMS)
1.6 Total Mating Force: 4.5 Kgf Max.
1.7 Total Unmating Force: 1.0 Kgf Min.
1.8 Operating Temperature: −55°C to +85°C

NOTES

1. MATERIAL:
   Housing:LCP, UL 94V−0, Color:Black.
   Terminal:Copper Alloy.
   Shell:Stainless Steel.
2. FINISH:
   Terminal:Selected Gold Plated in Contact Area,
   100u" MIN. Tin Plated in Solder Area,
   30u" MIN. Nickel Underplated Overall.
   Shell:100u" MIN. Tin Plated in Solder Area,
   30u" MIN. Nickel Underplated Overall.
3. This Product is RoHS Compliance Product.

Champyang International Ltd., Co

REV	DESCRIPTION.	APPD.	Date
A0	RELEASED	Allen	2019-10-07

FILE NO : ADP05 (Series)	TITLE 圖 名	DP 20-POS. FEMALE DIP TYPE		UNIT 單位	mm inch
TOLERANCE(公差) : 0.000 mm ± 0.13 mm 0.00 mm ± 0.25 mm	PART NO. 料 號	ADP05-20S-1x12014N0		SCALE 比例	1 : 1
	DRAWN BY 製 圖	Ben	DATE 日 期 2019-10-07	REV. 版 本	A0
ANGULAR ±2°	CHECKED BY 審 核	Allen	DATE 日 期 2019-10-07		