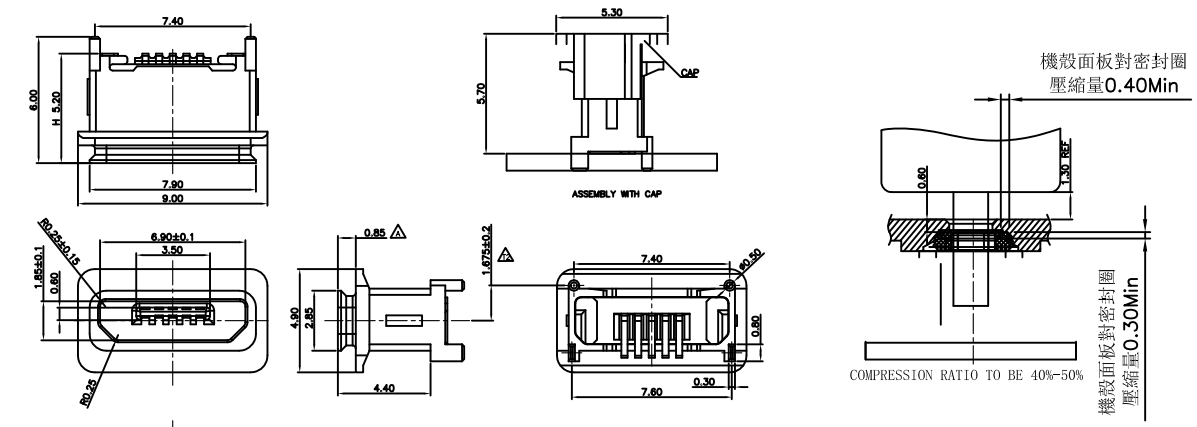

NOTES:

1 . MATERIAL:
HOUSING: THERMOPLASTIC HIGH-TEMP UL94V-0 BLACK COLOR.
CONTACT: COPPER ALLOY.
SHELL: STAINLESS STEEL.

2 . FINISH:
CONTACT: SEE TABLE 1.
OUT SHELL: 50u" Min. NICKEL ALL OVER △

3 . APPLIED TO IR SOLDERING PROCESS.

4 . SPECIFICATION:

4.1.ELECTRICAL CHARACTERISTICS
CONTACT CURRENT RATING: Signal pin 1A,Power pin 2.0A
VOLTAGE RATING: 30V AC rms.
CONTACT RESISTANCE: 30mΩ MAX.
DIELECTRIC WITHSTANDING VOLTANGE:
UNMATEP CONTACT 100V AC rms. 60MHZ FOR 1 MINUTE.
INSULATION RESISTANCE: 1000MΩ MIN. 100V DC
TEMPERATURE RANGE: -30℃ TO +85℃ △

4.2.MECHANICAL:
INSERTION FORCE: 35N MAX.
WITHDRAWAL FORCE: 8N~25N. △
DURABILITY: 10,000 CYCLES

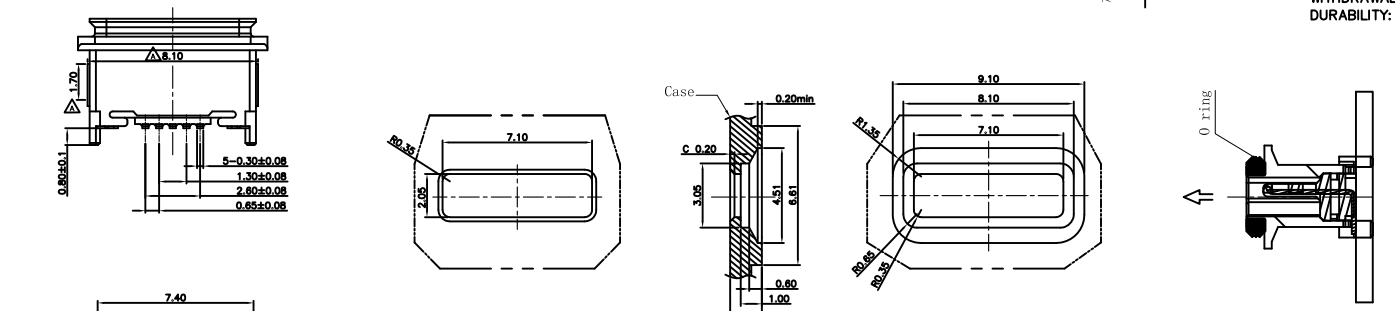

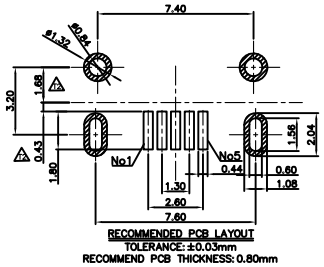

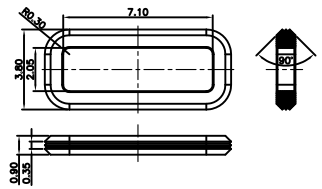

O RING (SILICON RUBBER)

Champyang International Ltd., Co

A0	RELEASED	Allen	2019-07-29
REV	DESCRIPTION.	APPD.	Date

FILE NO : AMU04 (Series)	TITLE 圖 名	MICRO USB2.0 VERTICAL WATERPROOF		UNIT 單位	mm inch
TOLERANCE(公差) : 0.000 mm ± 0.075 mm 0.00 mm ± 0.15 mm 0.0 mm ± 0.25 mm	PART NO. 料 號	AMU04-0105-xx1-S12-WP		SCALE 比例	1 : 1
	DRAWN BY 製 圖	Ben	DATE 日 期 2019-07-29	REV. 版本	A0
	CHECKED BY 審 核	Allen	DATE 日 期 2019-07-29		