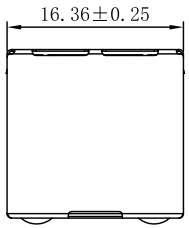

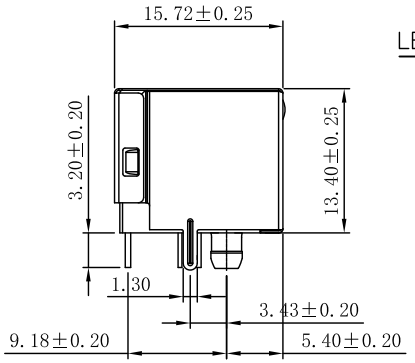

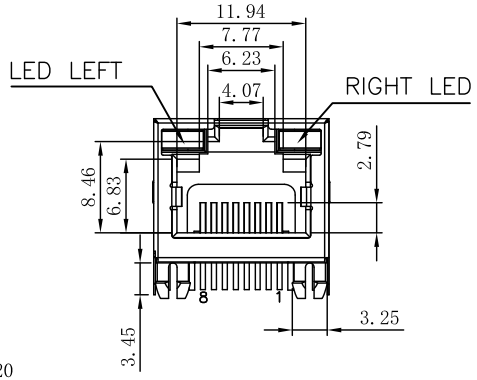

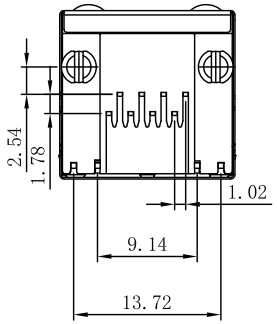

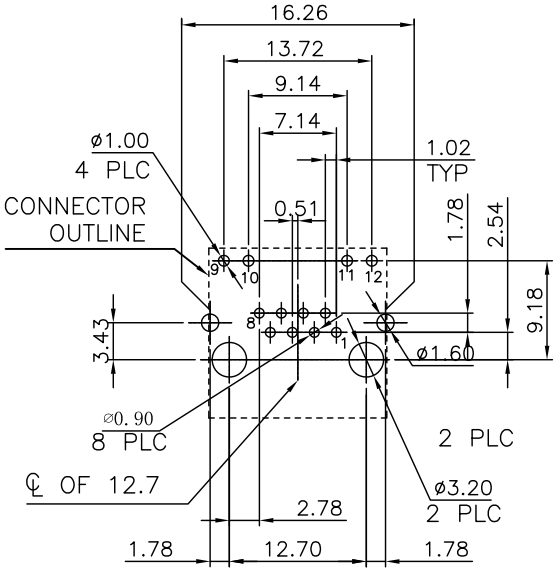

RECOMMENDED PCB LAYOUT
TOLERANCE: ±0.05 (TOP VIEW)

SPECIFICATION NOTES:

ELECTRICAL:

1. VOLTAGE RATING: 125 VAC RMS
2. CURRENT RATING: 1.5 AMP
3. CONTACT RESISTANCE: 30mΩ MAX.
4. INSULATION RESISTANCE: 500MΩMIN. AT 500V DC.
5. DIELECTRIC STRENGTH: 1000 VAC 50Hz 1MINUTE

MECHANICAL:

1. HOUSING/INSERT MATERIAL:
   THERMOPLASTIC, UL94V-0, COLOR BLACK
   CONTACT: COPPER ALLOY, T=0.35mm
2. PLATING: GOLD PLATING OVER NICKEL, PLATED NICKEL 50-80U". SN 100-120U. GOLD PLATED ON CONTENT AREA FU/3U/6U/15U/30U"

ENVIRONMENTAL:

1. STORAGE: 0° C TO 70° C
2. OPERATION: -40° C TO 85° C

LED ELECTRICAL CHARACTERISTIC

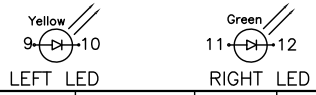

Standard LED	Wavelength	Forward V (Min/Max)	Forward A	Type
Green	568nm	1.8V/2.8V	20mA	squareness
Yellow	585nm	1.8V/2.8V	20mA	squareness

REV	DESCRIPTION.	APPD.	Date
A0	RELEASED	Allen	2018-08-02

Champyang International Ltd., Co

FILE NO : ARJ04 (Series)	TITLE 圖 名	Shielded RJ45 Modular Jack, Through Hole Type, with LED, Ports		UNIT 單位	mm inch
TOLERANCE(公差) : 0.000 mm ± 0.075 mm; 0.00 mm ± 0.15 mm; 0.0 mm ± 0.25 mm	PART NO. 料 號	ARJ04-010808-X11-S0L1		SCALE 比例	1 : 1
	DRAWN BY 製 圖	Kiddy	DATE 日 期 2018-08-02	REV. 版 本	A.0
	CHECKED BY 審 核	Allen	DATE 日 期 2018-08-02		