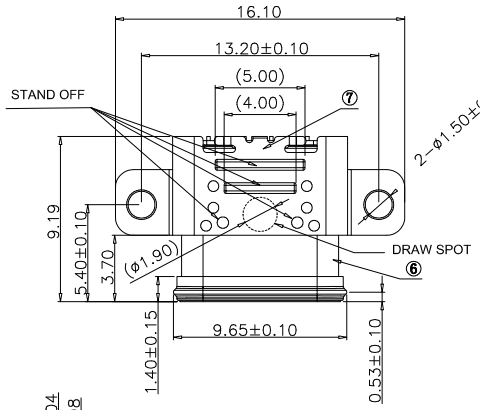

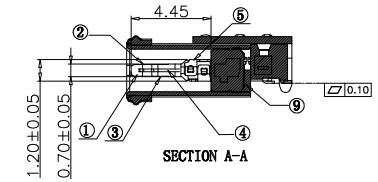

SECTION A-A

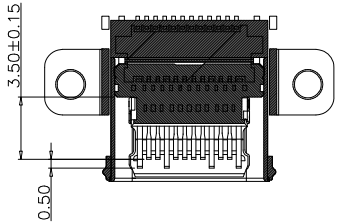

SECTION B-B

NOTES:
1. MATERIAL: SEE "TABLE 1";
2. FINISH: SEE "TABLE 1";

3. ELECTRICAL :
   3-1.CONTACT CURRENT RATING :
   5A(VBUS PIN AND GND PIN 1.25A/PIN),
   0.25A/PIN(OTHER PIN).
   3-2.INSULATION RESISTANCE :
   100 MEGAOHMS MIN. AT 250VDC.
   3-3.DIEELECTRIC WITHSTANDING VOLTAGE :
   100VAC MIN.
   3-4.LOW LEVEL CONTACT RESISTANCE :
   INITIAL 40mΩ MAX.
   AFTER 50mΩ MAX.

4.MECHANICAL CHARACTERISTICS :
   4-1. MATING FORCE: 5~20N.;
   4-2. UNMATING FORCE: 8~20N(INITIAL),6~20N(AFTER 10000 CYCLES);
   4-3.DURABILITY : 10,000 MATING CYCLES.
   4-4.OPERATING TEMPERATURE :-40°C TO +80°C

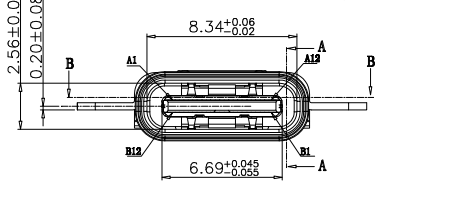

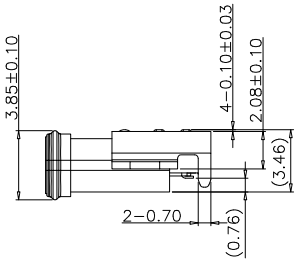

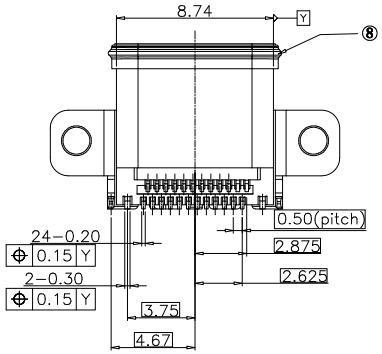

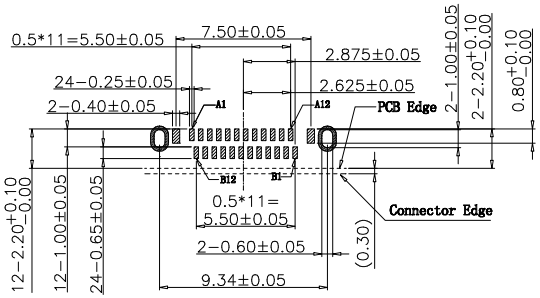

TABLE 1:

NO.	PART NAME	QTY	MATERIAL	DESCRIPTION	REMARK
⑨	GLUE WATER	1	EPOXY	BLACK;	
⑧	WATERPROOF JACKET	1	The silicone	BLACK;	
⑦	Shell-2	1	Stainless steel	Ni:50U"MIN PLATING;	T=0.40mm
⑥	Shell-1	1	Stainless steel	Ni:50U"MIN PLATING;	T=0.20mm
⑤	GND PLATE	1	Stainless steel	Ni:50U"MIN PLATING;	T=0.10mm
④	MID PLATE	1	Stainless steel		T=0.15mm
③	Terminal-B	12	Copper Alloy C1814	NICKEL 30-50U". SN 100-120U" GOLD PLATED SEE PART NUMBER	T=0.12mm
②	Terminal-A	12		NICKEL 30-50U". SN 100-120U" GOLD PLATED SEE PART NUMBER	T=0.12mm
①	Housing	1	PA46	Black	

Pin	Signal Name	Mating Sequence	Pin	Signal Name	Mating Sequence
A1	GND	First	B12	GND	First
A2	SSTXp1	Second	B11	SSRXp1	Second
A3	SSTXn1	Second	B10	SSRXn1	Second
A4	VBUS	First	B9	VBUS	First
A5	CC1	Second	B8	SBU2	Second
A6	Dp1	Second	B7	Dn2	Second
A7	Dn1	Second	B6	Dp2	Second
A8	SBU1	Second	B5	CC2	Second
A9	VBUS	First	B4	VBUS	First
A10	SSRXn2	Second	B3	SSTXn2	Second
A11	SSRXp2	Second	B2	SSTXp2	Second
A12	GND	First	B1	GND	First
SHELL		GND	SHELL		GND

Champyang International Ltd., Co

REV	DESCRIPTION.	APPD.	Date
A0	RELEASED	Allen	2019-07-01

FILE NO : AUC06 (Series)

TOLERANCE(公差) :
0.000 mm ± 0.075 mm
0.00 mm ± 0.15 mm
0.0 mm ± 0.25 mm

TITLE 圖 名	USB 3.1 TYPE C 24 PIN WATERPROOF SMT TYPE			UNIT 單位	mm inch
PART NO. 料 號	AUC06-0124-x11-S-WP			SCALE 比例	1 : 1
DRAWN BY 製 圖	Ben	DATE 日 期	2019-07-01	REV. 版 本	A.0
CHECKED BY 審 核	Allen	DATE 日 期	2019-07-01		